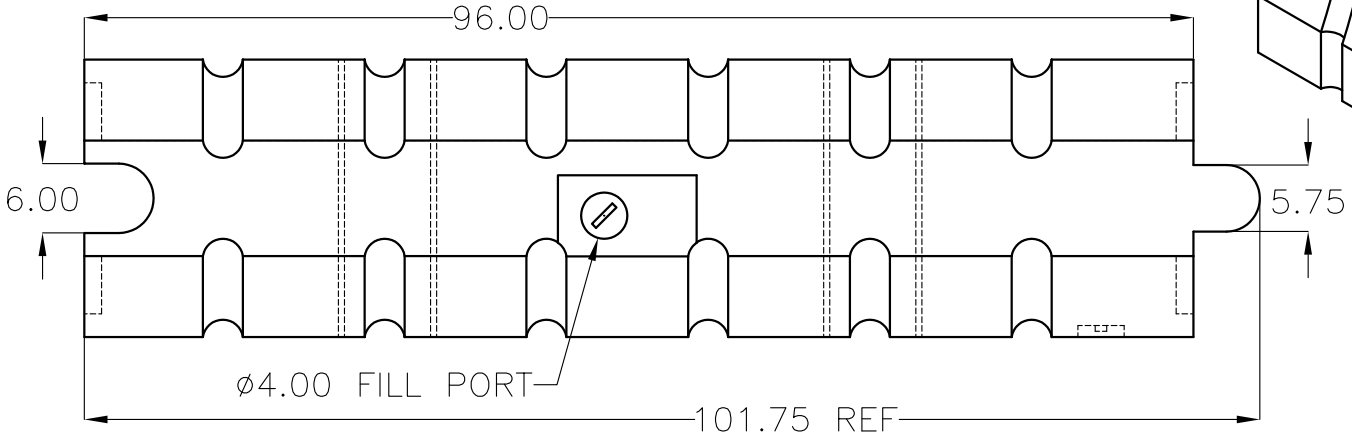
96.00
6.00
5.75
ø4.00 FILL PORT
101.75 REF

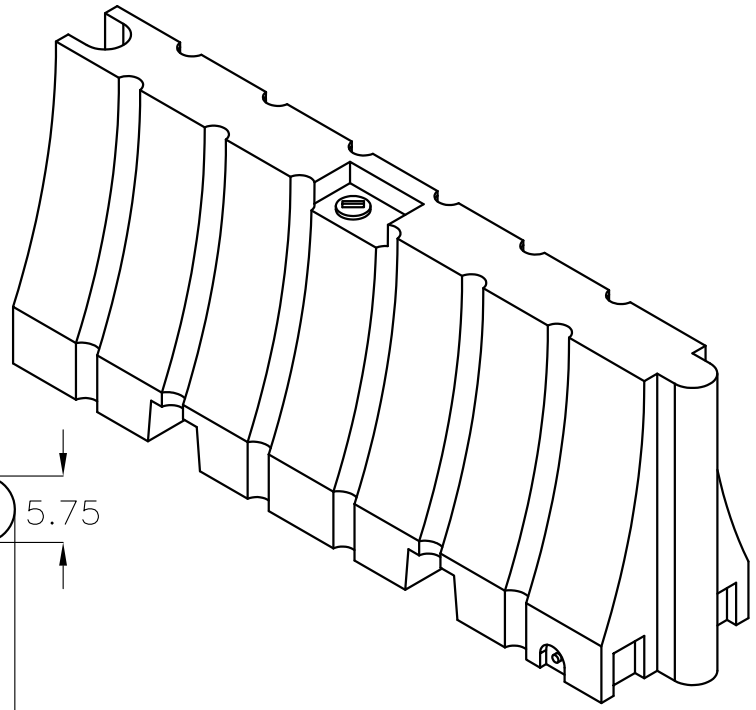

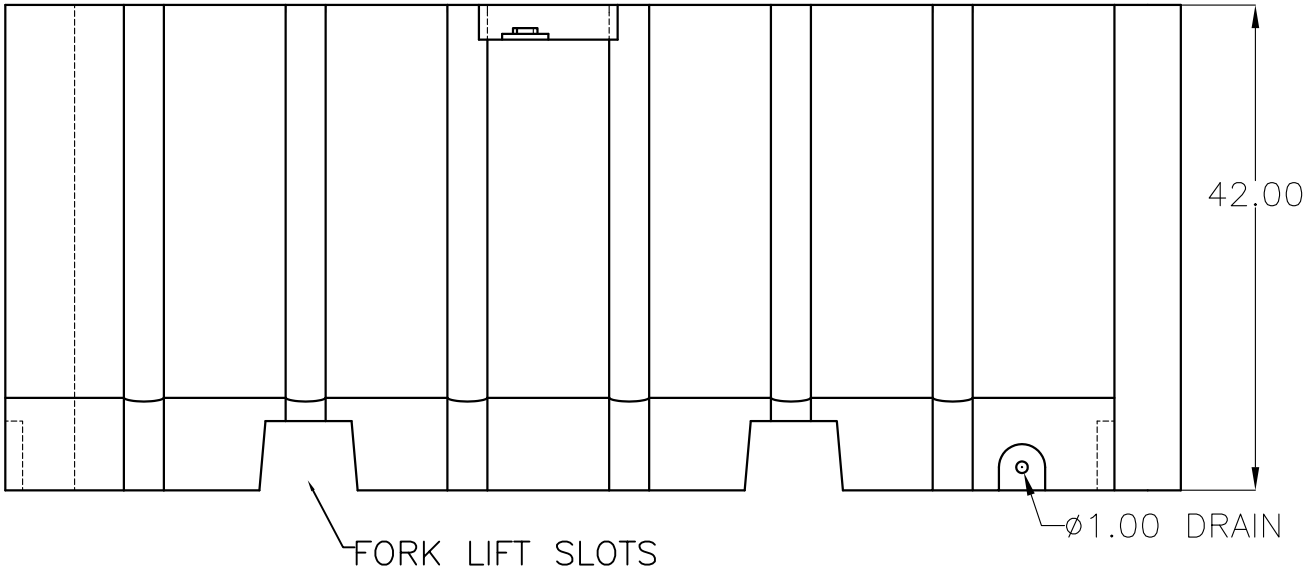
42.00
FORK LIFT SLOTS
ø1.00 DRAIN

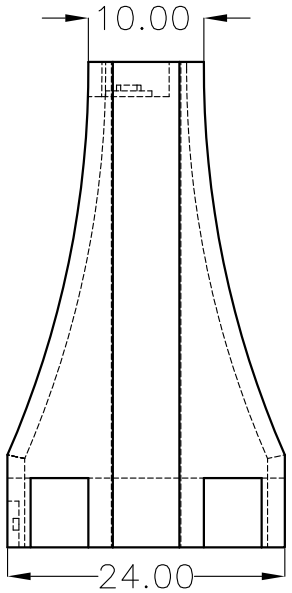
10.00
24.00